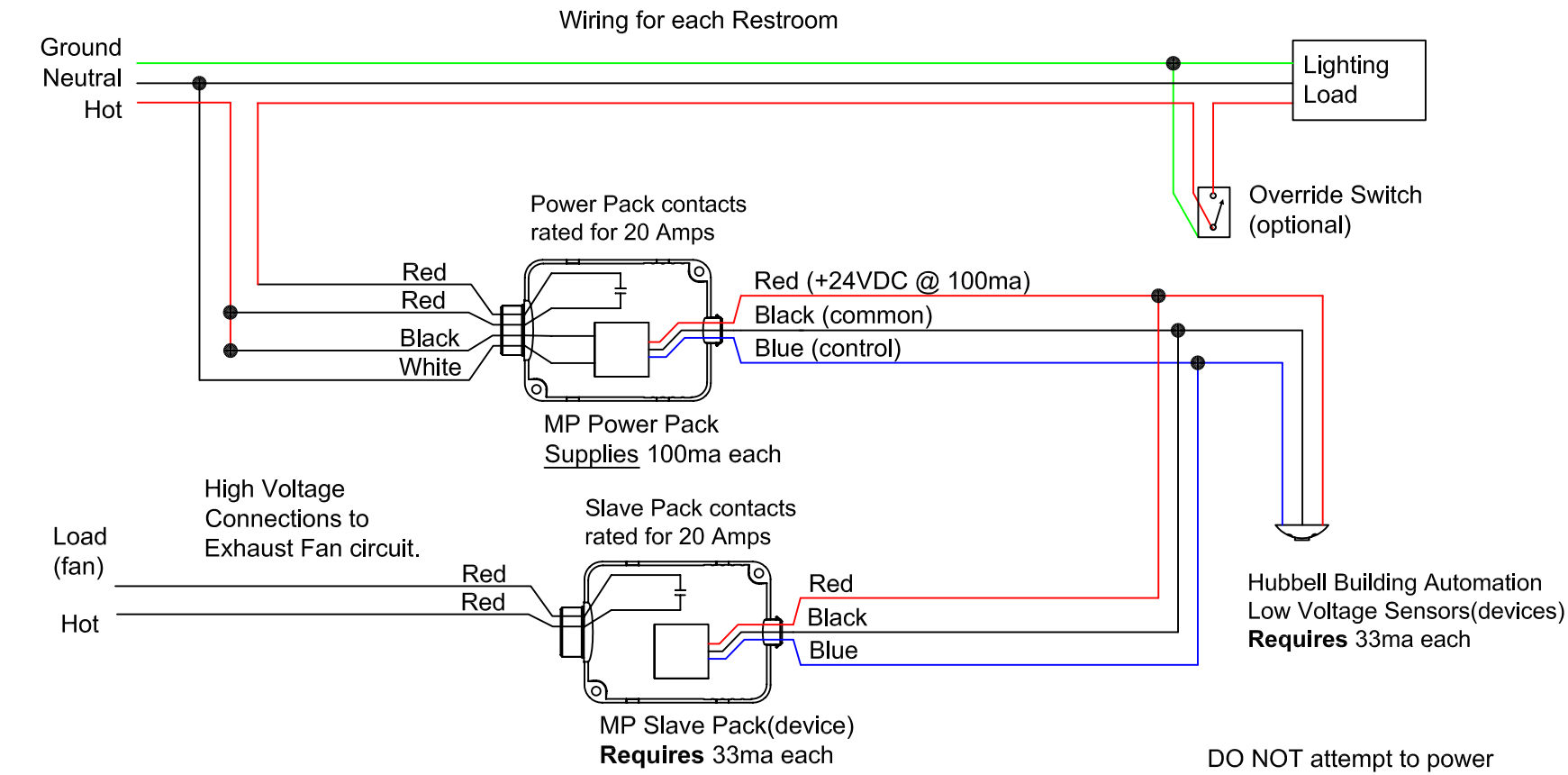

DO NOT attempt to power more than 3 devices, be it sensors or slave packs, from a single power pack.
3 Devices at 33ma = 100ma

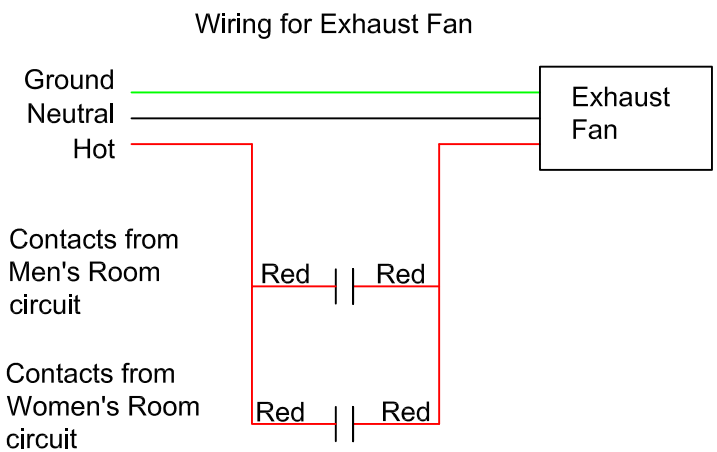

Using Slave Packs to switch Common Fan in 2 Restrooms

Building Automation, Inc.

DATE:	DWG NO.	REV
08 Jan 2004	CommonFan.dwg	A
SCALE		SHEET 1 of 1